ULTRADESK®

FREEZE V2

INSTAGRAM
@myultradesk

MYULTRADESK

FACEBOOK
@ultradesk

TWITTER
@ultradeskeu

YOUTUBE
Ultradesk

IMPORTANT INFORMATION

READ CAREFULLY.

KEEP THIS INFORMATION FOR FURTHER REFERENCE.

GENERAL GUIDELINES

- Please read the following instruction carefully and use the product accordingly.
- Please keep this manual and hand it over when you transfer the product.
- This summary may not include every detail of all variations and considered steps. Please **contact us** when further information and help are needed.

NOTES

- Please follow the assembly instructions precisely and only use the product as intended.
- If an odor is present when first opening the package, please leave the unwrapped product in a shaded and ventilated area for a few days to air out.
- Prior to assembly, please check the product for defects or missing accessories. If any defects are found or accessories are missing, do not use product as damage or injury may occur;
  Please **contact us** for assistance and replacement.
- It is suggested you regularly check the products bolts and connections to ensure safe use.
- Assemble the item on a soft flat and clean surface to avoid scratches and damage.
  It is recommended that two people assemble this product.

WARNINGS

- During assembly, keep parts and packaging materials away from children and pets as there could cause injury and are a potential choking hazard.
- Avoid sharp objects or corrosive chemicals to prevent damage to the product.
- Please open the item slowly and cautiously to avoid pinching your hands by metal joints, especially children.

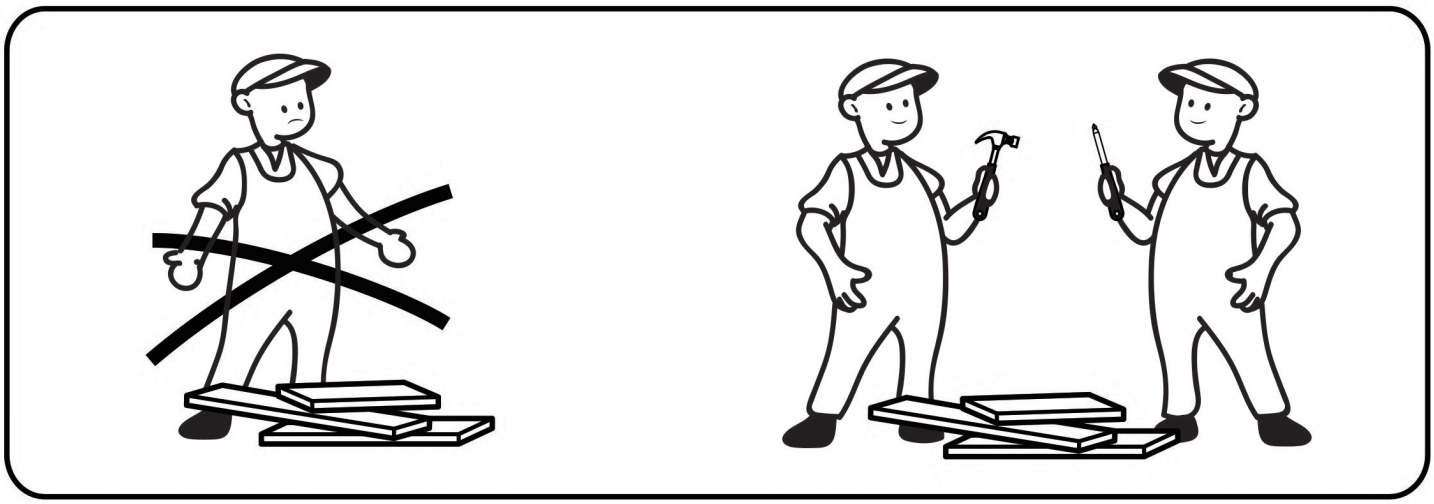

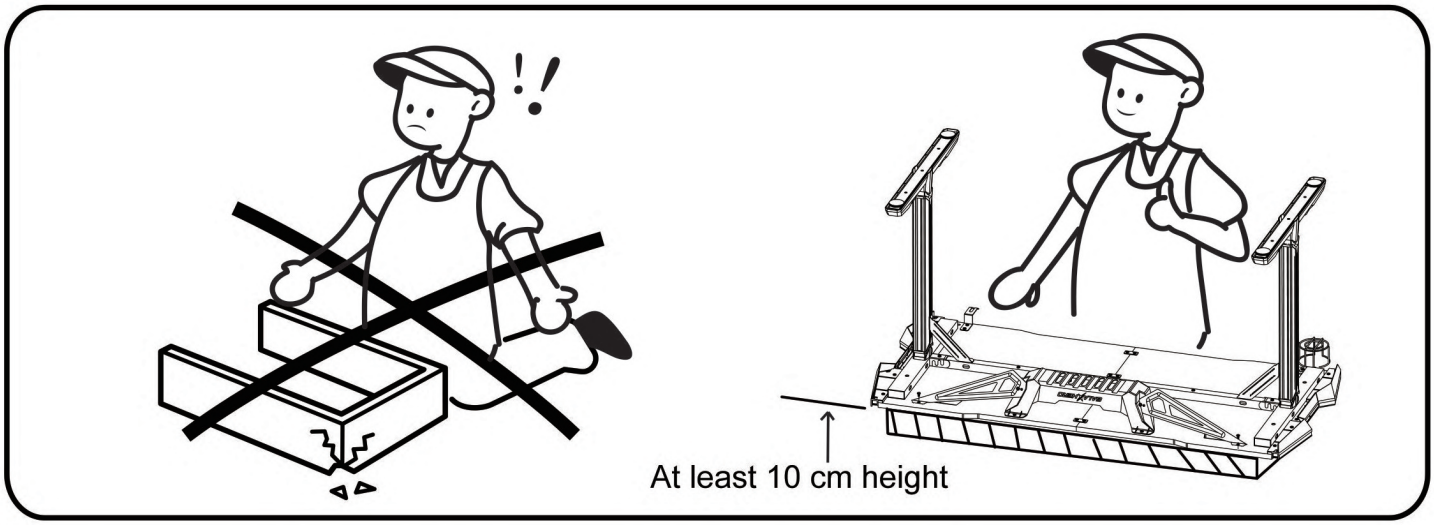

- Please check you have all hardware before assembling.
- Please ensure you have the name of the item and hardware part required and quantity.
- Please contact us by mail, if you have any questions, and we will reply you ASAP.
- Enjoy your new purchase!

EXPLODED DRAWING

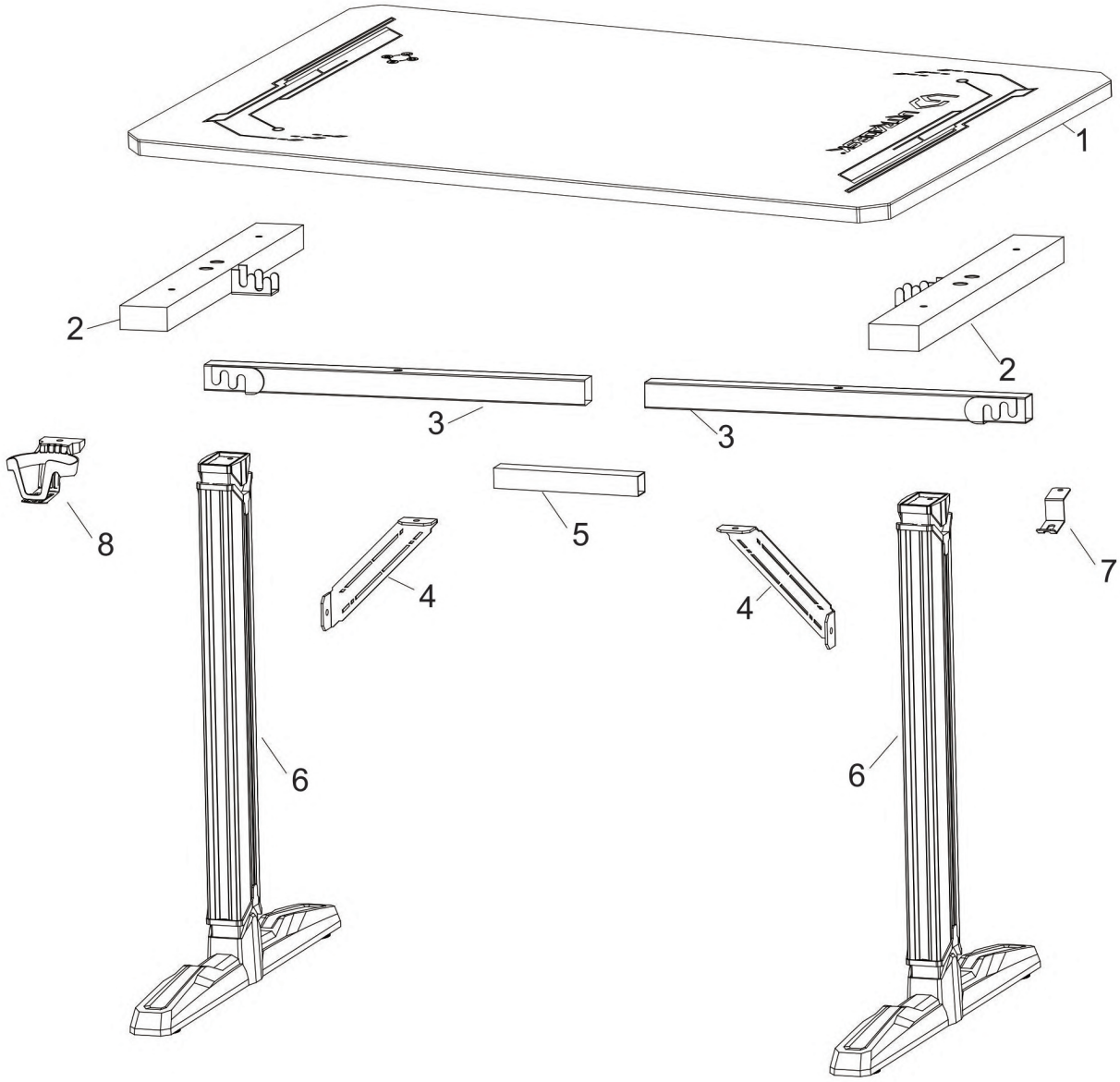

PARTS

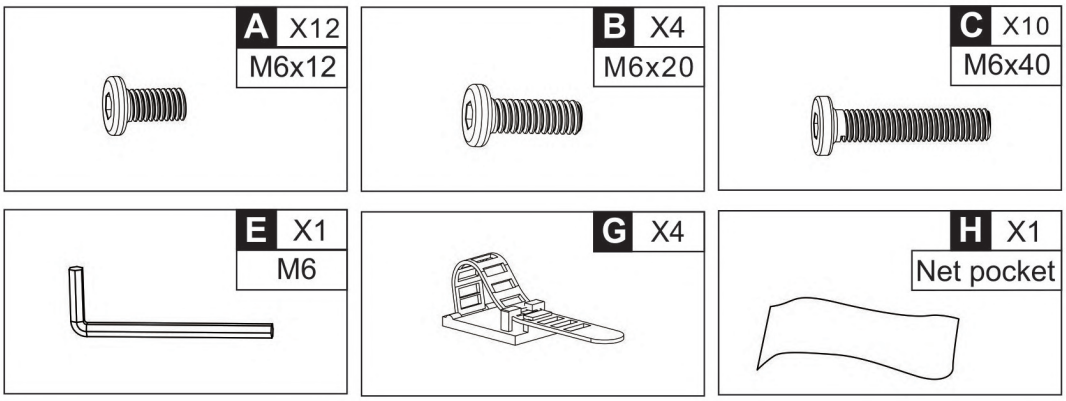

1

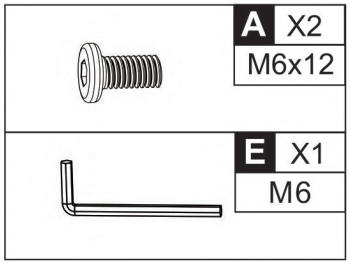

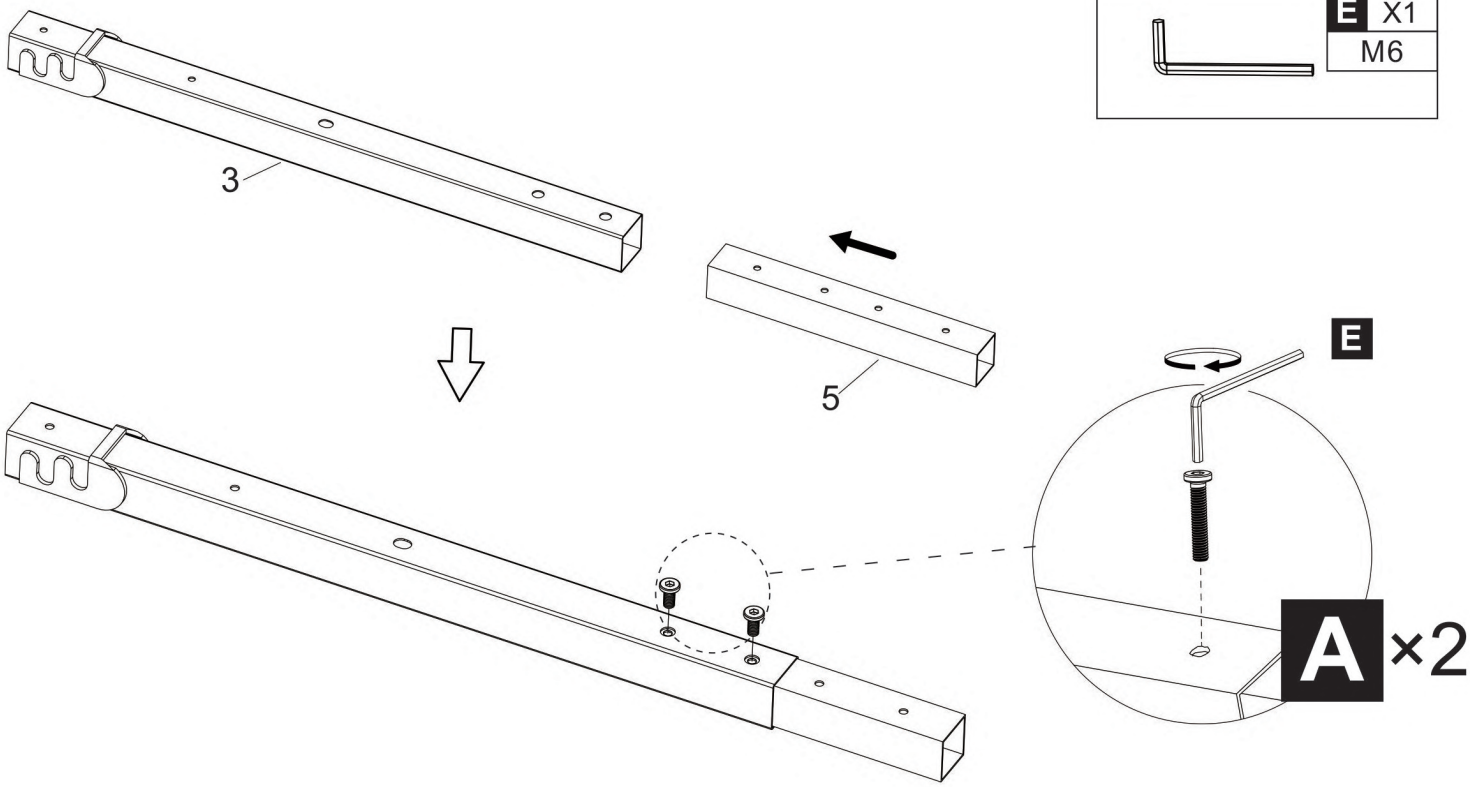

2

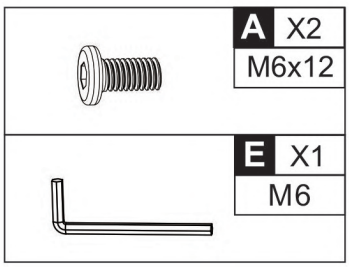

REMARK

1、Pay attention to the seam alignment.
2、Tighten the screws.

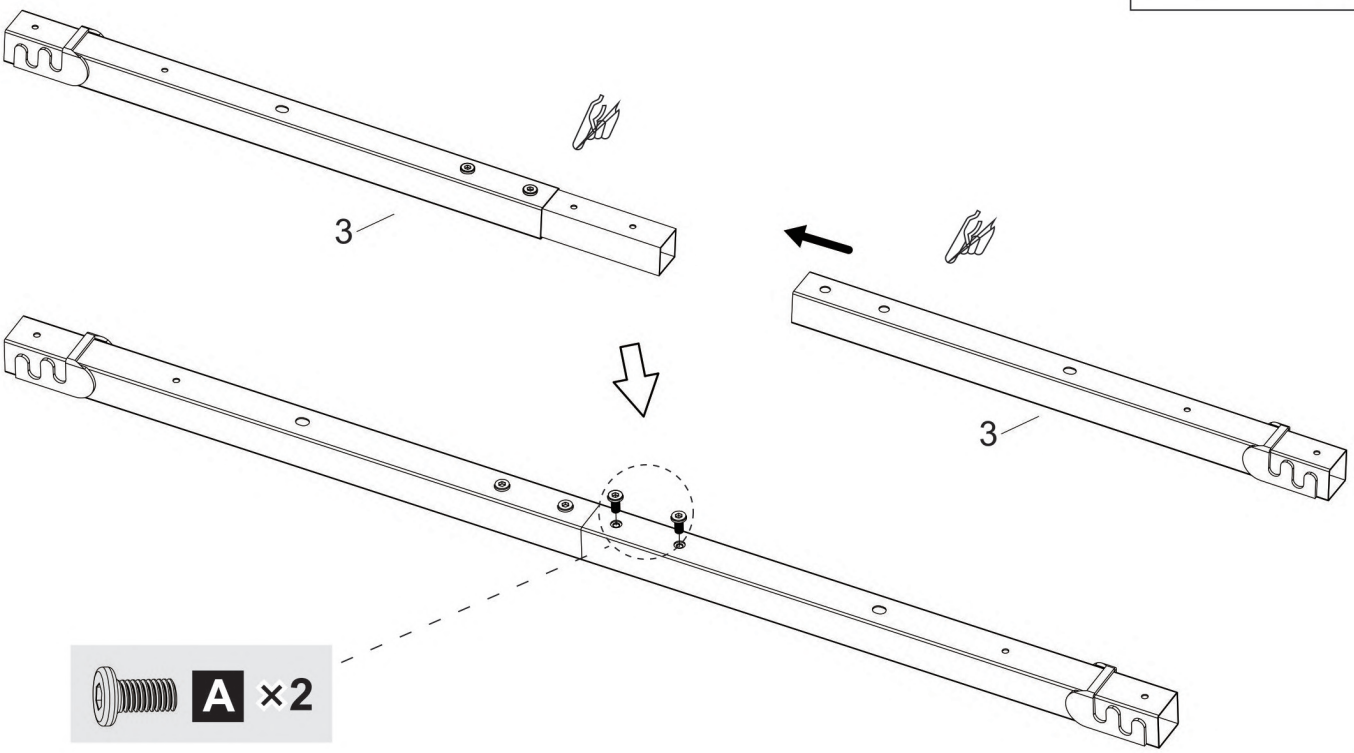

3

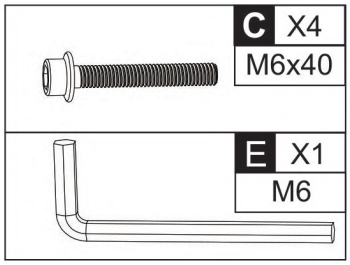

REMARK

1. Part **C** are the core screws, be sure to tighten them all.
2. Part **2** and Part **6** must be installed in the correct direction as shown in the figure.

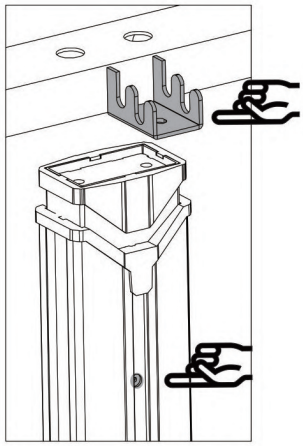

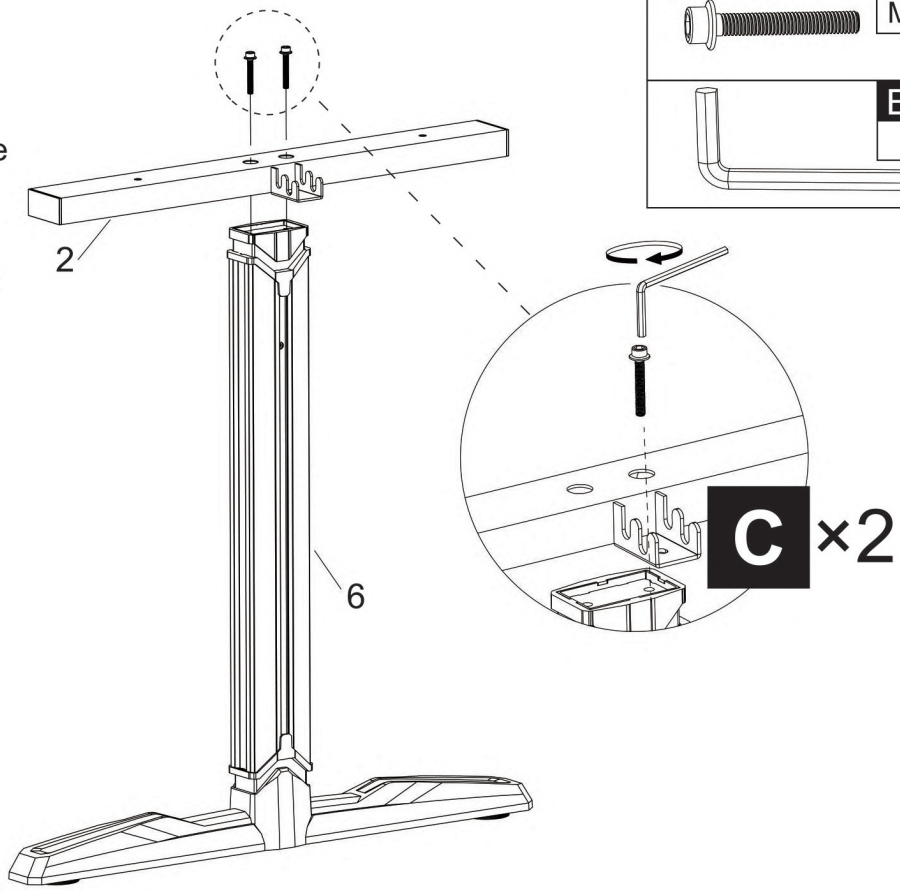

4

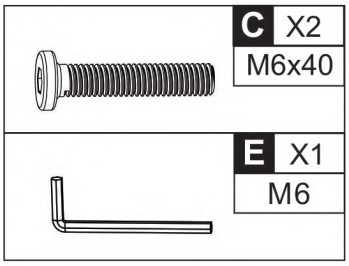

REMARK

1. Tighten the screws after the table is aligned.
2. Put a blanket under the board to avoid scratch or damage.
3. Part **3**, tooth mouth upwards, position installation as shown in the figure.

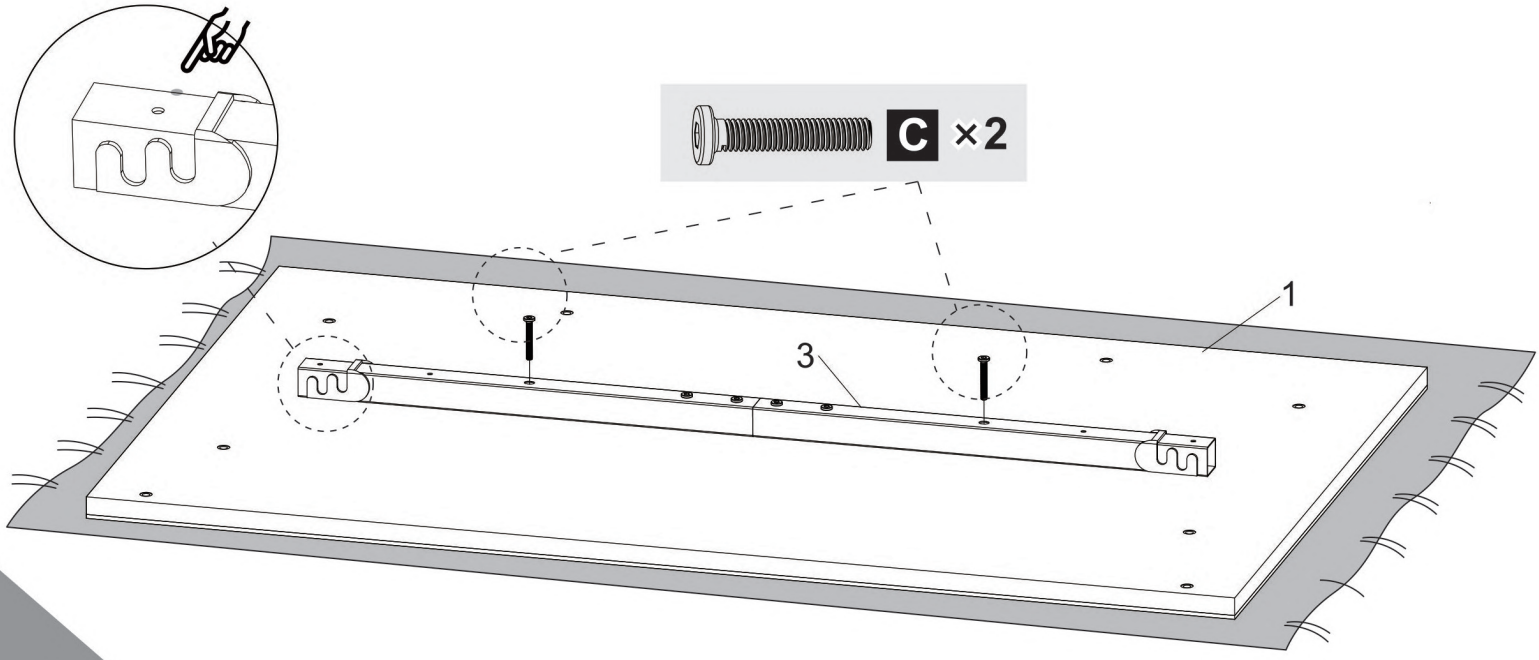

5

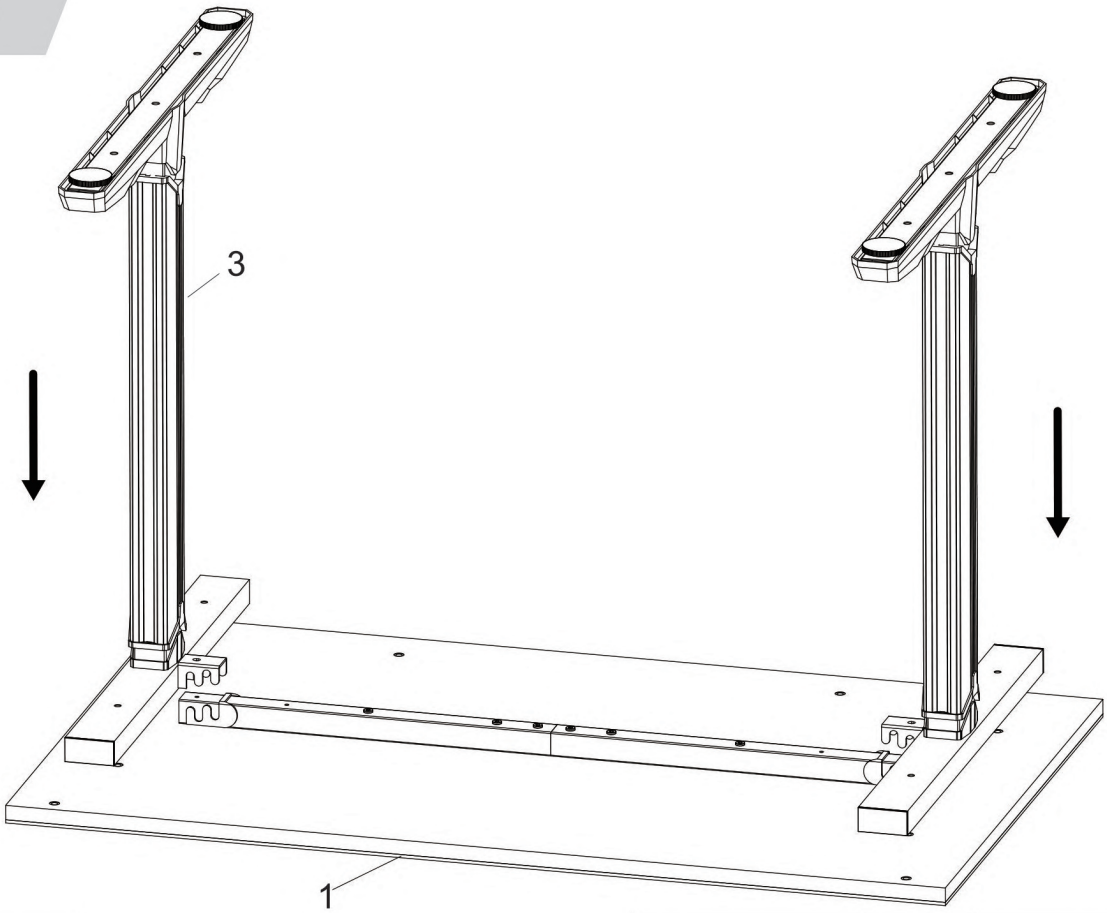

6

E X1 M6	A X2 M6x12

REMARK

Tighten the screws.

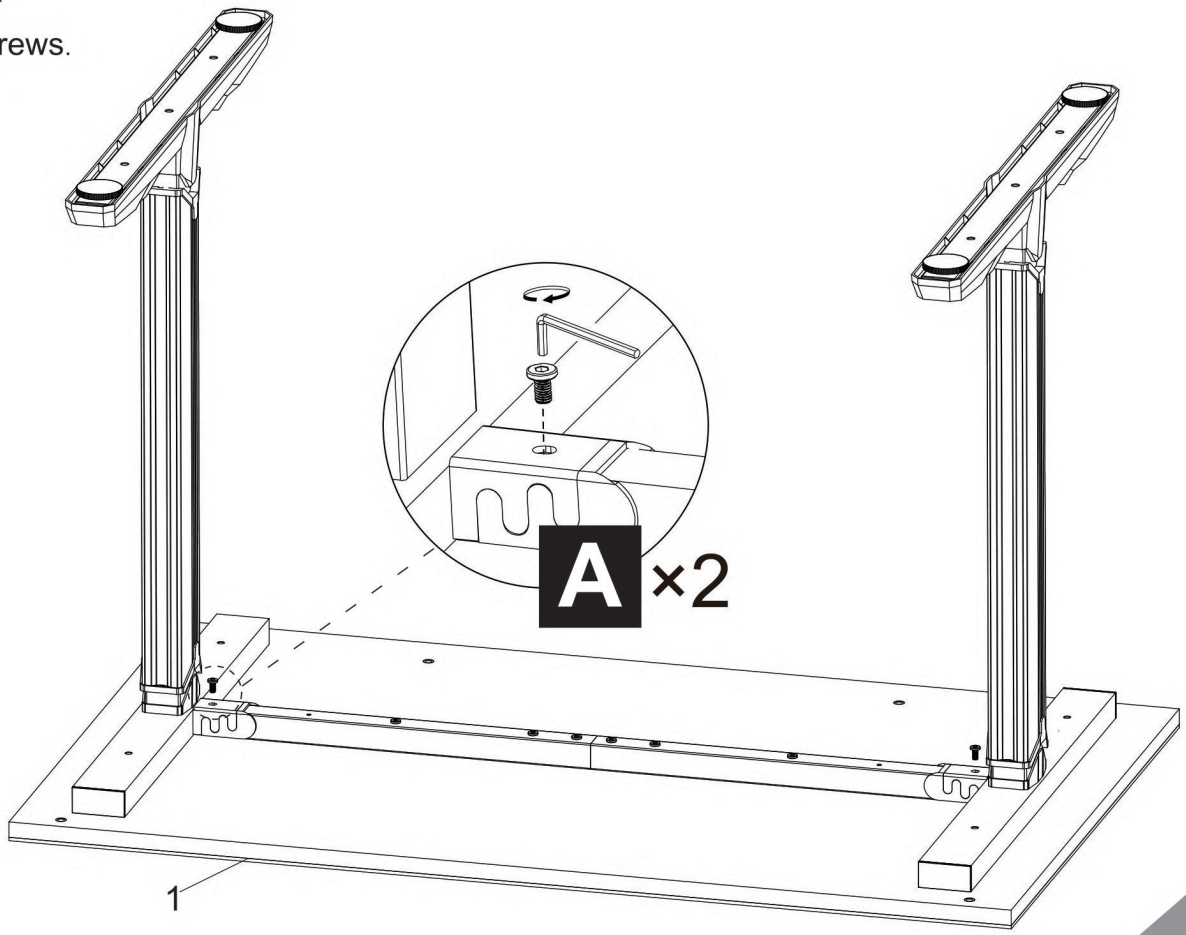

7

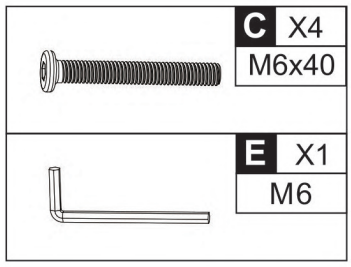

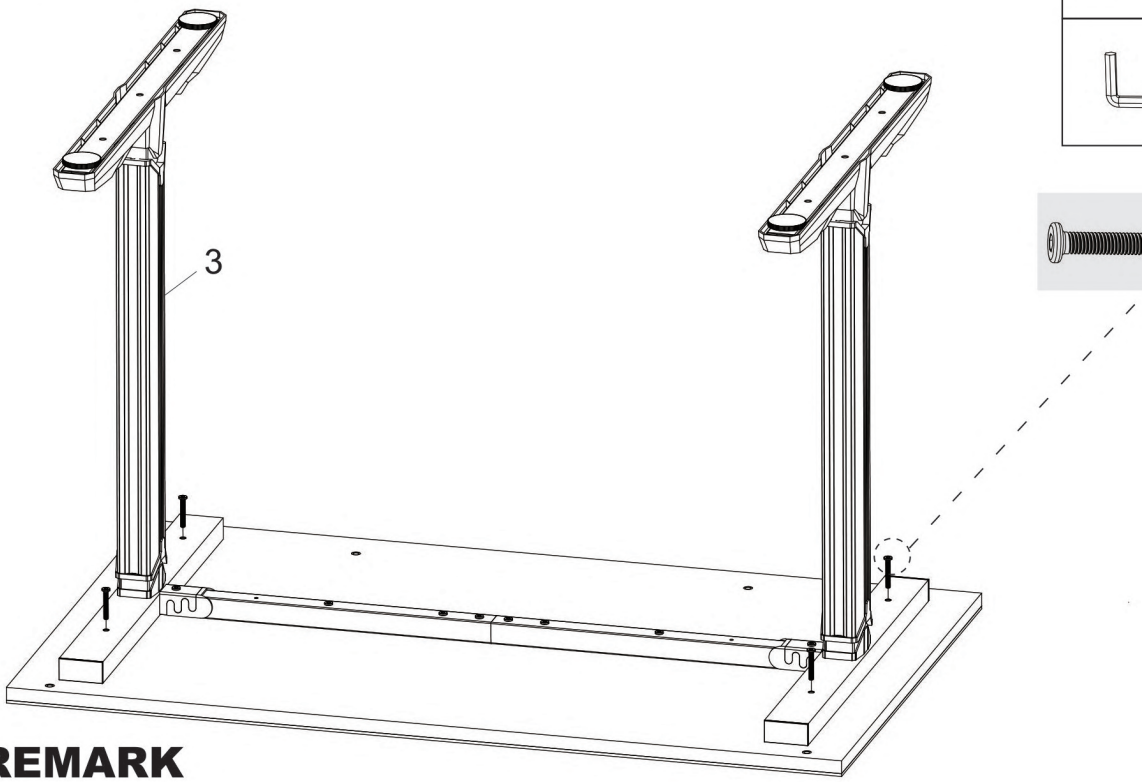

REMARK

Tighten the screws.

8

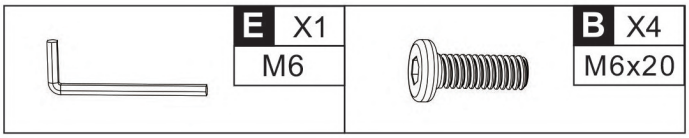

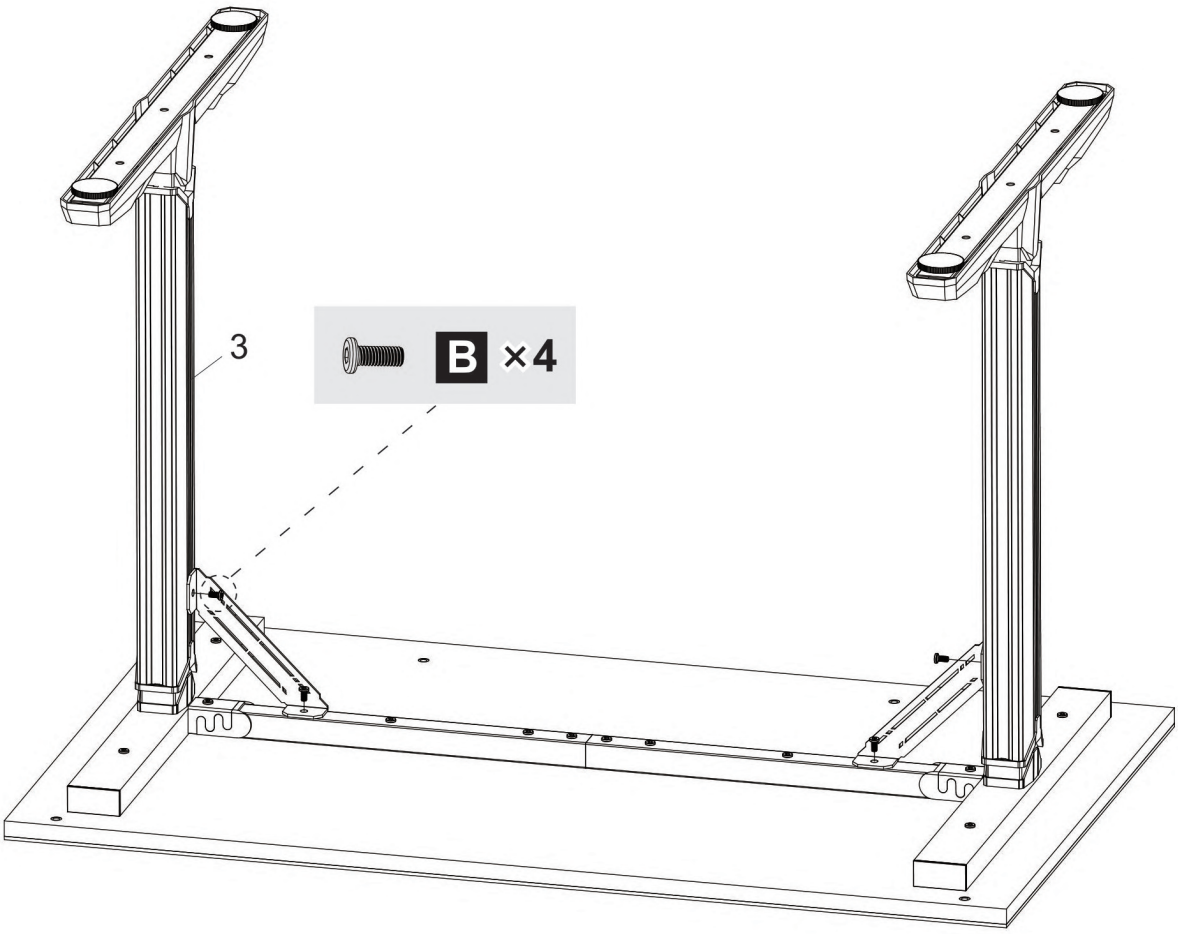

9

E X1 M6	A X2 M6x12

A ×2

7

8

REMARK

Part **7** and **8** can be interchangeable.

10

H X1 Net pocket	E X1 M6	A X4 M6x12

A ×4

Net pocket

11

DC:5V
RC :6A
Input power

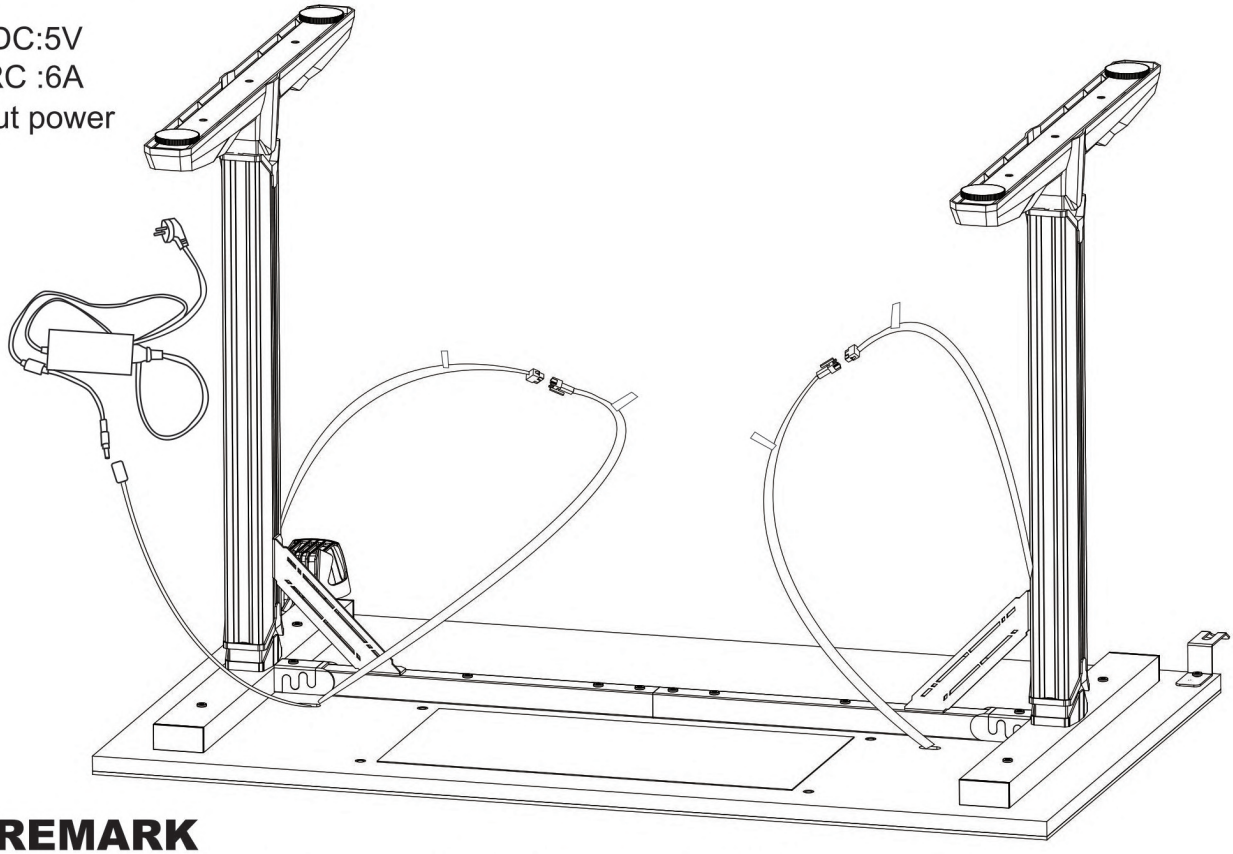

REMARK

Please connect the 2 wires according to the same color label.

12

REMARK

Need two people to flip the desk carefully.

Light Instructions

①: Light Button Instructions

	ON/OFF ---------- Light memory function
	Brightness / speed adjustment --------- brightness has seven levels (only changeable for static monochrome).Speed also has seven levels (adjustable except static monochrome)
	Color adjustment ---------- 9 colors for switching
	Mode adjustment ---------- 5 modes for adjustment

②: Description of dynamic effects of lighting

Breathe	White light rhythmic flashing
Meteor	The light flows as a meteor, with a gap
Full Color	Eight-color light cycles alternately
Contrast color	Two colors half and half, static display

③: Description of modes of the lighting

	Mode	Button indication	Types	Remarks
1	Breathe	ON		Light memory function (automatically jump to the last shutdown state after three seconds of breathing)
2	Static monochrome	Switch color	9	White Yellow Green Cyan-blue Blue Purple Rose Red Orange
		Switch brightness	7	
3	Static breathing	Switch color	10	The 10th is a full color breath color
		Switch speed	7	
4	Monochromatic meteor divergence	Switch color	9	The lights flow from top to bottom
		Switch speed	7	
5	Full color surging	Switch speed	7	Full color mode, no color cutting function